finder®
SWITCH TO THE FUTURE

Monitoring relays 10 A

71
SERIES

- Industrial motors
- Industrial refrigerators
- Elevators and lifts
- Textile machines
- Labelling machines
- Carousel warehouses

Universal voltage or current detecting and monitoring relay

71.41.8.230.1021 - Voltage monitoring

71.51.8.230.1021 - Current monitoring

- Zero voltage memory according to EN 60204-7-5
- Programmable for DC or AC detection level:
  - range detecting: upper and lower value
  - upper set point minus hysteresis range (5…50)% for switch on
  - lower set point plus hysteresis range (5…50)% for switch on
- Fault memory
- Electrical isolation between measuring and supply circuits
- Immune to supply interruptions of < 200 ms
- Wide detecting range:
  - voltage: DC (15…700)V, AC (15…480)V
- 35 mm rail (EN 60715) mounting

Screw Terminal

For outline drawing see page 7

71.41.8.230.1021

- Programmable universal voltage monitoring relay

- AC/DC voltage detection - adjustable
- AC (50/60 Hz) (15…480)V
- DC (15…700)V
- Switch-on hysteresis (5…50)%
- Switch-off delay (0.1…12)s

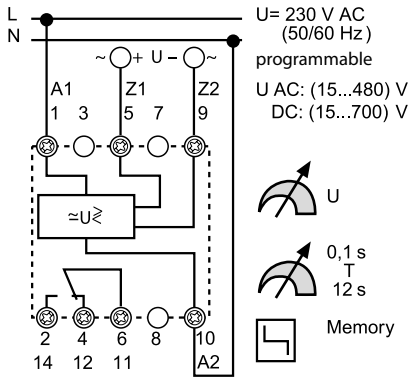

71.51.8.230.1021

- Programmable universal current monitoring relay
- Usable with current transformer 50/5, 100/5, 150/5, 250/5, 300/5, 400/5 or 600/5

- AC/DC current detection - adjustable
- AC(50/60 Hz) (0.1…10)A with current transformer to 600 A
- DC (0.1…10)A
- Switch-on hysteresis (5…50)%
- Switch-off delay (0.1…12)s
- Start delay (0.1…20)s

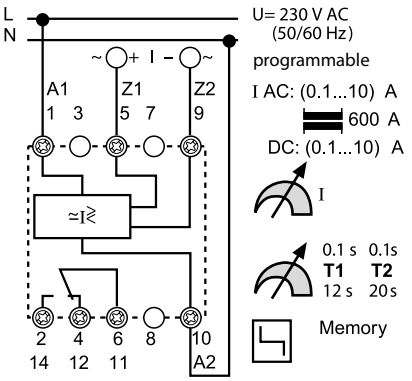

		71.41.8.230.1021	71.51.8.230.1021
Contact specification			
Contact configuration		1 CO (SPDT)	1 CO (SPDT)
Rated current/Maximum peak current	A	10/15	10/15
Rated voltage/ Maximum switching voltage	V AC	250/400	250/400
Rated load AC1	VA	2500	2500
Rated load AC15 (230 V AC)	VA	500	500
Single phase motor rating (230 V AC)	kW	0.5	0.5
Breaking capacity DC1: 30/110/220 V	A	10/0.3/0.12	10/0.3/0.12
Minimum switching load	mW (V/mA)	300 (5/5)	300 (5/5)
Standard contact material		$AgSnO_2$	$AgSnO_2$
Supply specification			
Nominal voltage (U_N)	V AC (50/60 Hz)	230	230
	V DC	—	—
Rated power AC/DC	VA (50 Hz)/W	4/—	4/—
Operating range	AC	(0.85…1.15)U_N	(0.85…1.15)U_N
	DC	—	—
Technical data			
Electrical life at rated load AC1	cycles	$100 \cdot 10^3$	$100 \cdot 10^3$
Detection levels	AC(50/60 Hz)/DC	(15…480)V/(15…700)V	(0.1…10)A at transducer to 600 A/(0.1…10)A
Switch-off/reaction/Start delay		(0.1…12)s/< 0.35 s/< 0.5 s	(0.1…12)s/< 0.35 s/(0.1…20)s
Switch-on level of the detecting level	%	5…50	5…50
Fault memory - programmable		Yes	Yes
Electrical isolation: Supply to Measuring circuits		Yes	Yes
Ambient temperature range	°C	–20…+55	–20…+55
Protection category		IP 20	IP 20
Approvals (according to type)		CE EAC	

Thermistor temperature sensing relays for industrial applications

71.91 - 1 Pole, without fault memory

71.92 - 2 Pole, with fault memory

- Overload protection according EN 60204-7-3
- Positive safety logic - make contact opens if the measured value is outside of the acceptable range
- Industry standard module
- LED status indication
- 35 mm rail (EN 60715) mounting

Screw Terminal

	71.91.x.xxx.0300	71.92.x.xxx.0001
		
	• Thermistor relay • 1 Pole normally open contact • 24 V AC/DC, or 230 V AC supply	• Thermistor relay with fault memory • 2 Pole changeover contacts • 24 V AC/DC, or 230 V AC supply
	• Temperature detection with PTC • PTC short circuit detection • PTC wire breakage detection	• Temperature detection with PTC • Fault memory - switch selectable • Reset by Reset button or supply interruption • PTC short circuit detection • PTC wire breakage detection
	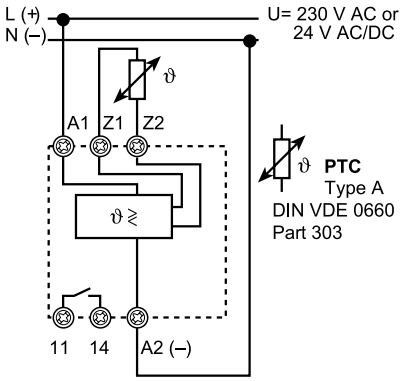	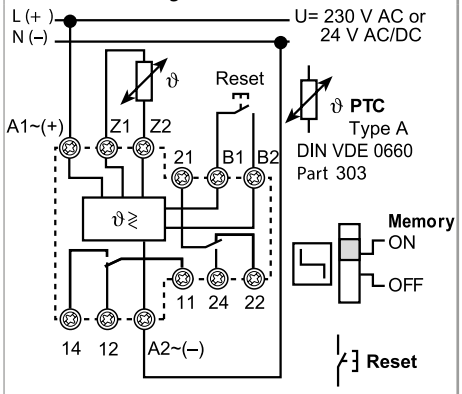

For outline drawing see page 7

Contact specification			
Contact configuration		1 NO (SPST-NO)	2 CO (DPDT)
Rated current/Maximum peak current	A	10/15	10/15
Rated voltage/ Maximum switching voltage	V AC	250/400	250/400
Rated load AC1	VA	2500	2500
Rated load AC15 (230 V AC)	VA	500	500
Single phase motor rating (230 V AC)	kW	0.5	0.5
Breaking capacity DC1: 30/110/220 V	A	10/0.3/0.12	10/0.3/0.12
Minimum switching load	mW (V/mA)	300 (5/5)	300 (5/5)
Standard contact material		$AgSnO_2$	$AgSnO_2$
Supply specification			
Nominal voltage (U_N)	V AC (50/60 Hz)	230	230
	V AC/DC	24	24
Rated power AC/DC	VA (50 Hz)/W	1/0.5	1/0.5
Operating range	AC	(0.85…1.15)U_N	(0.85…1.15)U_N
	DC	—	—
Technical data			
Electrical life at rated load AC1	cycles	$100 \cdot 10^3$	$100 \cdot 10^3$
PTC detecting: Short circuit/Temperature OK		< 20 Ω/>20 Ω…< 3 kΩ	< 20 Ω/> 20 Ω…< 3 kΩ
Reset/PTC break		< 1.3 kΩ/> 3 kΩ	< 1.3 kΩ/> 3 kΩ
Delay time/activaction time		—/< 0.5 s	—/< 0.5 s
Fault memory - switch selectable		—	Yes
Electrical isolation: Supply to Measuring circuits		Yes	Yes
Ambient temperature range	°C	–20…+55	–20…+55
Protection category		IP 20	IP 20
Approvals (according to type)		CE EAC	

Ordering information

Example: Universal voltage monitoring relay with LCD display for AC/DC voltage detection, 1 CO (SPDT) contact rated 10 A 250 V, supply voltage 230 V, programmable delay time and fault memory.

7 1 . 4 1 . 8 . 2 3 0 . 1 0 2 1

Series

Type
4 = AC/DC universal- Voltage detection
5 = AC/DC universal- Current detection
9 = Thermistor relay (temperature monitoring with PTC thermistor)

No. of poles
1 = 1 CO (SPDT) types 71.41, 51
1 = 1 NO (SPST-NO) type 71.91
2 = 2 CO (DPDT) type 71.92

Supply version
0 = AC(50/60 Hz)/DC
8 = AC (50/60 Hz)

Supply voltage
024 = 24 V AC/DC
230 = 230 V
400 = 400 V

Additional functions
0 = Basic function
1 = Adjustable detection value

Special versions
0 = No fault memory
1 = Fault memory

Options
0 = No delay time
2 = Adjustable delay times

Contact circuit
0 = CO (nPDT)
3 = NO (nPST-NO)

Selection guide

Type	71.41.8.230.1021	71.51.8.230.1021	71.91.0.024.0300	71.91.8.230.0300	71.92.0.024.0001	71.92.8.230.0001
Supply system type	Single phase	Single phase	Single phase	Single phase	Single phase	Single phase
Functions						
Undervoltage/Overvoltage	AC or DC	—	—	—	—	—
Window mode (Undervoltage and Overvoltage)	AC or DC	—	—	—	—	—
Phase loss	—	—	—	—	—	—
Phase rotation	—	—	—	—	—	—
Asimmetry	—	—	—	—	—	—
Neutral loss	—	—	—	—	—	—
Overcurrent/Undercurrent	—	AC or DC	—	—	—	—
Window mode (Undercurrent and Overcurrent)	—	AC or DC	—	—	—	—
Thermistor relay (PTC)	—	—	•	•	•	•
Delay Times						
Fixed	—	—	•	•	•	•
Adjustable	•	•	—	—	—	—
Supply voltage						
24 V AC/DC	—	—	•	—	•	—
230 V AC	•	•	—	•	—	•
400 V AC	—	—	—	—	—	—
Module width						
35 mm wide	•	•	—	—	—	—
22.5 mm wide	—	—	•	•	•	•
17.5 mm wide	—	—	—	—	—	—
Other data						
Fault memory	•	•	—	—	•	•
Contact configuration	1 CO	1 CO	1 NO	1 NO	2 CO	2 CO

See selection guide for 70 series functions

Technical data

Insulation				
Insulation according to EN 61810-1			insulation rated voltage V	250
			rated impulse withstand voltage kV	4
			pollution degree	3
			over-voltage category	III
Dielectric strength (A1, A2, B1, B2), and contact terminals (11, 12, 14) and terminals (Z1, Z2)		V AC	2500	
		kV (1.2/50 µs)	6	
Dielectric strength at open contact		V AC	1000	
EMC specifications				
Type of test			**Reference Standard**	
Electrostatic discharge	contact discharge		EN 610004-2	8 kV
	air discharge		EN 610004-2	8 kV
Radio-frequency electromagnetic field (80…1000)MHz			EN 610004-3	3 V/m
Fast transients (burst) (5-50 ns, 5 kHz) on (A1, A2, B1, B2) and (Z1, Z2)			EN 610004-4	2 kV
Surges (1.2/50 µs) on (A1, A2, B1, B2) and (Z1, Z2)	common mode		EN 610004-5	4 kV
	differential mode		EN 610004-5	4 kV
Radio-frequency common mode (0.15 ÷ 80 MHz) to A1 - A2			EN 610004-6	10 V
Radiated and conducted emission			EN 55022	class B
Other data				
Voltage and current values at terminals Z1 Z2	Type 71.91, 71.92		PTC temperature measurement V / mA	24 V/2.4
Maximum length of wiring to the Supply terminals/ Measuring terminals	Type 71.41		Voltage measurement m	150/50
	Type 71.51		Current measurement m	150/50
(Wiring capacitance no greater than 10 nF/100 m)	Type 71.91, 71.92		PTC temperature measurement m	50/50
Measuring principle	Type 71.41, 71.51, 71.91, 71.92		The measured value is the arithmetical average of 500 individual measurements taken over a 100 ms period. Interruptions less than < 200 ms are ignored.	
Safety logic	Type 71.41, 71.51, 71.91, 71.92		Positive safety logic - When the value being monitored lies within the acceptable area, the make contact is closed.	
Reaction time (following the application of the supply voltage)	Type 71.41, 71.51, 71.91, 71.92		≤ 0.5 s	
Power lost to the environment	without contact load	W	4	
	with rated current	W	5	
Permitted storage temperature range		°C	–40…+85	
Protection category			IP 20	
Screw torque		Nm	0.8	
Max. wire size			solid cable	standed cable
		mm²	0.5…(2 x 2.5)	(2 x 1.5)
		AWG	20…(2 x 14)	(2 x 16)

E

Outline drawings

Types 71.41/51
Screw Terminal

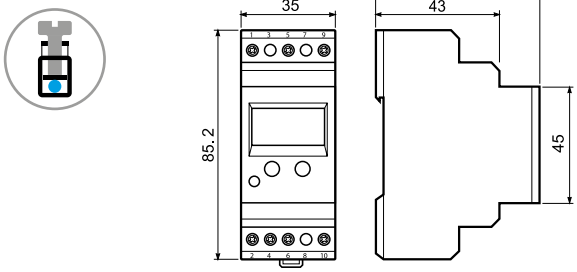

Type 71.91
Screw Terminal

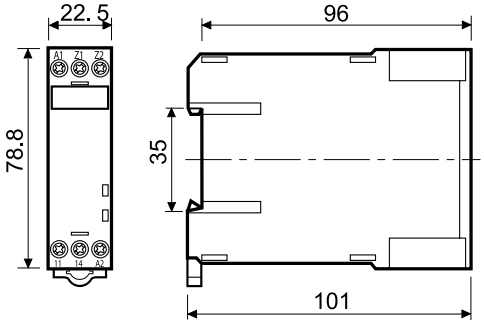

Type 71.92
Screw Terminal

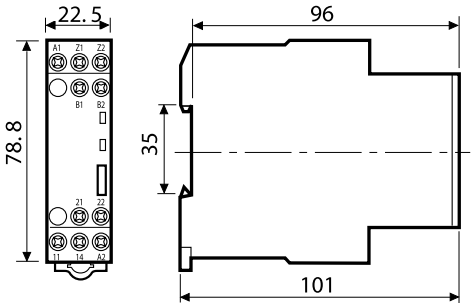

E

Explanation of relay marking and LED/LCD display

Monitoring relay without LCD-display	
ON	LED green steady light: supply voltage is on and measuring system is active.
DEF	Default: the detected value is outside of the acceptable range. LED red flashing: delay time is running, see the function diagram. LED red steady light: output relay is off, contact 11-14 (6-2) is open.
MEMORY ON	Fault memory switched on: the state of the output relay after the accurrence of a fault –contact 11-14 (6-2) open– will be maintained, monitored value returns to within acceptable limits. Fault reset is made by power down or by operating of the "RESET" (71.92.x.xxx.0001).
MEMORY OFF	Fault memory turned off: the sate of the output contatcts will only remain in the "fault" condition –contact 11-41 (6-2) open– while the monitored value is outside of the acceptable limits. When the monitored value returns within the acceptable limits the contact will revert to the energised state. Monitored equipment will start again automatically.

Monitoring relay with LCD-display			
SET/RESET	Relay 71.41 and 71.51. Sets and resets the programmable values - see operating in the packing.		
SELECT	Relay 71.41 and 71.51. Selects the desired parameter for programming - see operating instructions.		
DEF	Default, LED red steady or flashing.		
PROG Modus	Enter the programming mode by simultaneously pressing the buttons "SET/RESET" and "SELECT" for 3 seconds. The word "prog" is shown for 1 second. "SELECT" allows the choise of "AC" or "DC", and is confirmed with "SET/RESET". Successively pressing the button "SELECT" brings up the choises of Up, or Up_{Lo}. The appropriate choise is made by pressing the "SET/RESET" button. The next step will program the appropriate values and the selection of the fault memory function (which is selected with a "YES" or "NO"). If all programming steps are completed the display will read "end".		
Short programmin instruction	After repeatedly pressing the "SET/RESET" button the measured value will be displayed, or "0" appears if nothing is connected to Z1 and Z2 (5 and 9). If the programming is brocken off before "end" is shown in the display the previous program will remain unchanged after an interruption of the supply voltage.		
Program query	Pushing the "SELECT" button for at least 1 second, enters the "program inquiry mode". The programmed mode and the values are shown on the repeated pressing of the "SELECT" button.		
Flashing M (memory)	Fault memory has had effect (fault acknowledgement and reset is made by a 1 second press of the "SET/RESET" button).		
LCD-display	V = volt A = amp Up = upper limit (with hysteresis in down direction) Lo = lower limit (with hysteresis in up direction) Up_{Lo} = upper and lower limit - range detecting	Level = value Hys = hysteresis M = memory (fault) Yes = yes - with memory no = no - without memory	$t_1 = T_1$ - time during which short-time fulctuations are not taken into account $t_2 = T_2$ - (monitoring relay 71.51) the time during which inrush currents are not taken into a account

E

LED/LCD status announcement/advice

Type	Starting mode	Normal operation	Abnormal mode		Reset
71.41.8.230.1021 **Memory OFF**		**Measured value displayed** Normal operation Set point is OK 11-14 is closed	**Measured value displayed** Time T runs, Set point is not OK 11-14 is closed	**Measured value displayed** After expiry of T Set point is not OK 11-14 is open **Will close, if set point is OK**	
71.41.8.230.1021 **Memory ON**		**Measured value displayed** Normal operation Set point is OK 11-14 is closed	**Measured value displayed** Time T runs, Set point is not OK 11-14 is closed	**M in the display flashes** **Measured value displayed** After expiry of T Set point is not OK 11-14 is open **Will not close at RESET**	**M in the display - static** **Measured value displayed** After expiry of T Set point is not OK 11-14 is open **Will close at RESET**
71.51.8.230.1021 **Memory OFF**	**Measured value displayed** Time T2 runs, Set point immaterial 11-14 is closed	**Measured value displayed** Normal operation Set point is OK 11-14 is closed	**Measured value displayed** Time T runs, Set point is not OK 11-14 is closed	**Measured value displayed** After expiry of T Set point is not OK 11-14 is open **Will close, if set point is OK**	
71.51.8.230.1021 **Memory ON**	**Measured value displayed** Time T2 runs, Set point immaterial 11-14 is closed	**Measured value displayed** Normal operation Set point is OK 11-14 is closed	**Measured value displayed** Time T runs, Set point is not OK 11-14 is closed	**M in the display flashes** **Measured value displayed** After expiry of T Set point is not OK 11-14 is open **Will not close at RESET**	**M in the display - static** **Measured value displayed** After expiry of T Set point is not OK 11-14 is open **Will close at RESET**
71.91.x.xxx.0300		Normal operation Set point is OK 11-14 is closed	Temperature to high or PTC line break or PTC short circuit 11-14 is open **Will close, if set point is OK**		
71.92.x.xxx.0001 **Memory OFF**		Normal operation Set point is OK 11-14 is closed	Temperature to high or PTC line break or PTC short circuit 11-14 is open **Will close, if set point is OK**		
71.92.x.xxx.0001 **Memory ON** ON OFF ON OFF		Normal operation Set point is OK 11-14 is closed	Temperature to high or PTC line break or PTC short circuit 11-14 is open		Temperature is OK 11-14 is open **Will close at RESET**

E

Functions

Type 71.41.8.230.1021

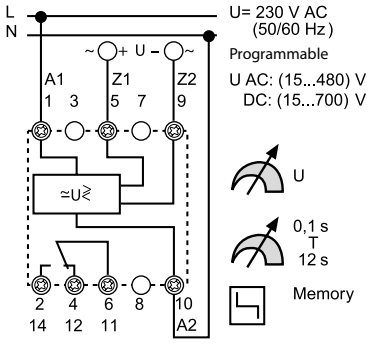

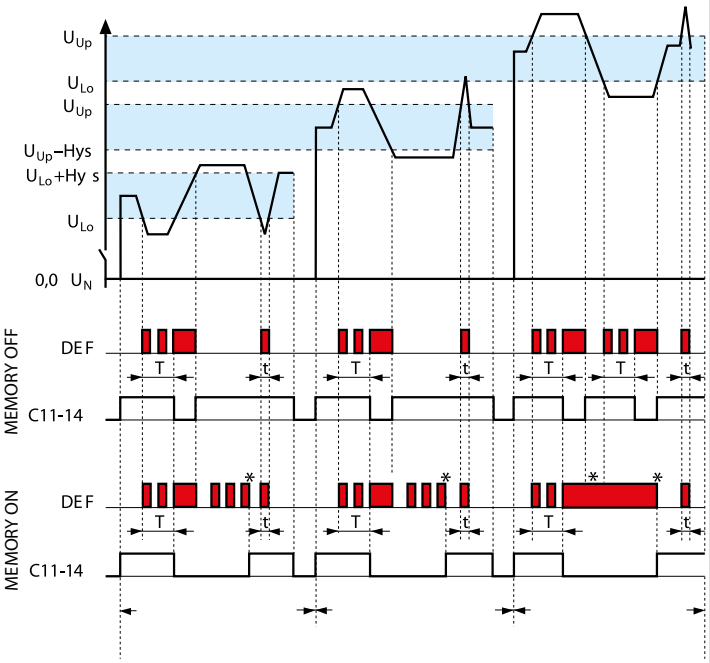

* RESET MEMORY = Pressing "SET/RESET" > 1 s

Switch off

U_{Lo} – mode
If the monitored value is less than the lower-limit and, time T has expired.

U_{Up} – mode
If the monitored value is higher than the upper limit, and time T has expired.

U_{Lo} U_{Up} – mode
If the monitored valueof voltage is outside of the upper or lower voltage limits, and time T has expired.

Voltage dips < T do not result in output relay switching off.

Switch on

U_{Lo} or U_{Up} – modes
When passing the hysteresis value.

U_{Lo} U_{Up} – mode
When passing the U_{Lo} or U_{Up} value.

RESET MEMORY
Pressing "SET/RESET" > 1 sec.

C = output contact
Normally open 11-14 (6-2) closed.

E

Functions

Type 71.51.8.230.1021

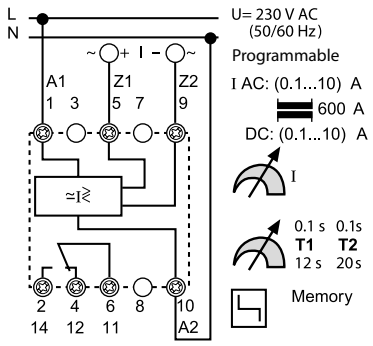

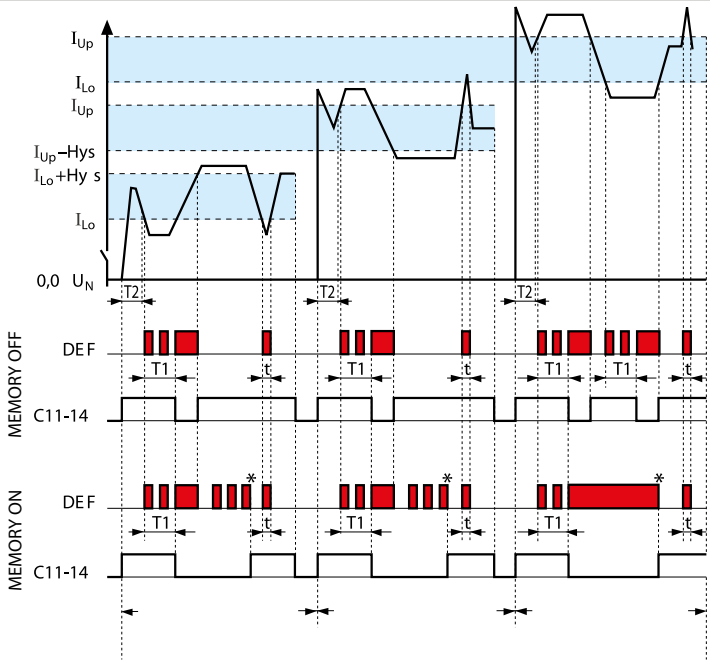

* RESET MEMORY = Pressing "SET/RESET" > 1 s

Switch off

I_{Lo} – mode
If the monitored value is less than the lower-limit and, time T_1 has expired.

I_{Up} – mode
If the monitored value is higher than the upper limit, and time T_1 has expired.

I_{Lo} I_{Up} – mode
If the monitored value of voltage is outside of the upper or lower limits, and time T_1 has expired.

Inrush current < T2 is ignored

Current dips < T1 do not result in output relay switching off.

Switch on

I_{Lo} or I_{Up} – modes
When passing the hysteresis value.

I_{Lo} I_{Up} – mode
When passing the I_{Lo} or I_{Up} value.

RESET MEMORY
Pushing "SET/RESET" > 1 sec.

C = output contact
Normally open 11-14 (6-2) closed.

Type 71.91.x.xxx.0300

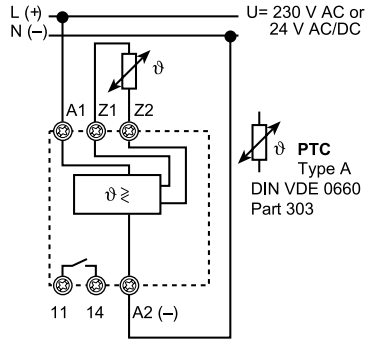

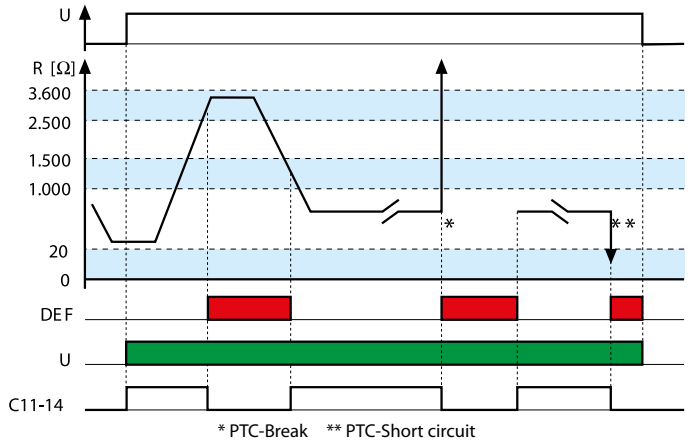

* PTC-Break ** PTC-Short circuit

Switch off
- Thermistor line break
- Over temperature R_{PTC} > (2.5…3.6)kΩ
- Thermistor line short circuit (R_{PTC} < 20 Ω)
- Loss of supply

Switch on
Temperature within limits
R_{PTC} > (1.0…1.5)kΩ on power-up.
(1…1.5)kΩ on cooling.

C = output contact
Normally open
11-14 Closed when temperature within limits.

E

Functions

Type 71.92.x.xxx.0001

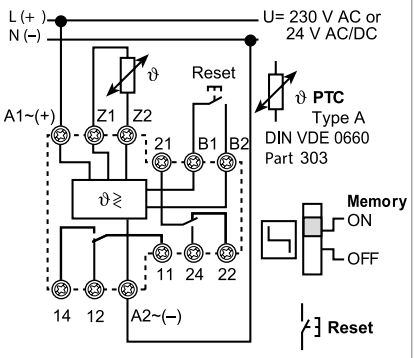

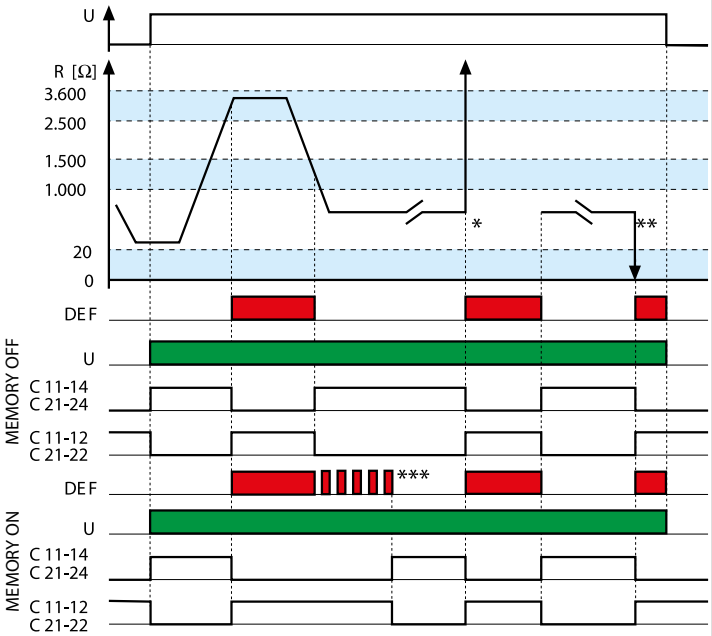

* PTC-Break ** PTC-Short circuit

*** RESET MEMORY = Operate the RESET key, or interrupt the supply.

Switch off
– Thermistor line break
– Over temperature R_{PTC} > (2.5…3.6)kΩ,
– Thermistor line short circuit (R_{PTC} < 20 Ω)
– Loss of supply

Switch on
Temperature within limits (20 Ω…2.5 kΩ) on power-up.
R_{PTC} > (1…1.5)kΩ on cooling.

Select MEMORY OFF
If monitored value is expected to cross the resetting threshold.

Select MEMORY ON
If monitored value is expected to remain within limits.

RESET MEMORY
Operate the RESET key, or interrupt the supply.

C = output contact
Normally open 11-14 (21-24)
Closed when temperature within limits.

Normally closed 11-22 (21-22)
Closed when temperature outside limits/Power off.